MCDB series

DUAL-ROD SLIDE CYLINDER

mindman

Features:

- Compact in width and length with precision guidance.
- High lateral loads can be applied on both slide and linear bearing unit.
- Can be used as body or end plate sliding mechanism.
- Can have shock absorbers fitted enabling absorption of high loads with low noise.

Specification:

Model	MCDB		
Acting type	Double acting		
Tube I.D. (mm)	10,16	20	25,32
Port size	M5×0.8		PT 1/8
Medium	Air		
Min operating pressure	1.5 kgf/cm^2	1.0 kgf/cm^2	
Max operating pressure	9.9 kgf/cm^2		
Proof pressure	15 kgf/cm^2		
Available Temperature range	−5~+60℃ (No freezing)		
Available speed range	30~500 mm/sec		
Lubricator	Not required		
Cushion	Shock absorber		
Stroke adjustable range	Stand stroke ±2mm		
Sensor switch	RCD		

Table for standard stroke:

Tube I.D.	Stroke (mm)
ϕ10	25,50,75
ϕ16, 20, 25, 32	25,50,75,100,125,150,175,200

Order example:

MCDB − 03 − 10 − 50 M

- MCDB: MODEL
- 03: TYPE OF BEARING
- 10: TUBE I.D.
- 50: STROKE (mm)
- M: Magnet

03	Slide bearing

Installation of sensor switch:

Sensor switch: RCD

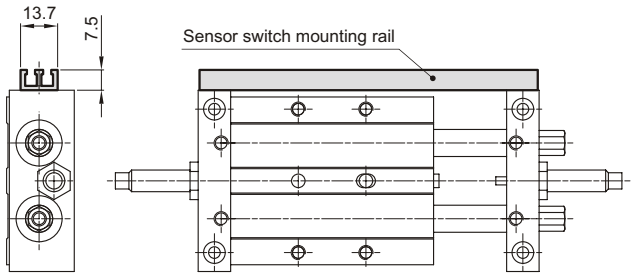

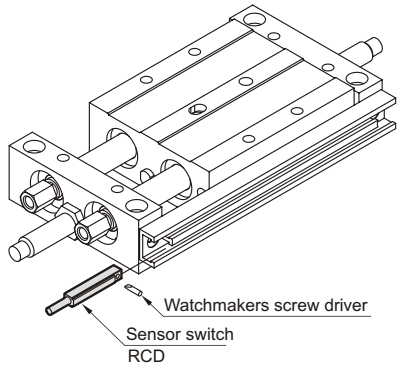

MCDB Inside structure & Parts list ϕ10, ϕ16, ϕ25

DUAL-ROD SLIDE CYLINDER

ϕ10

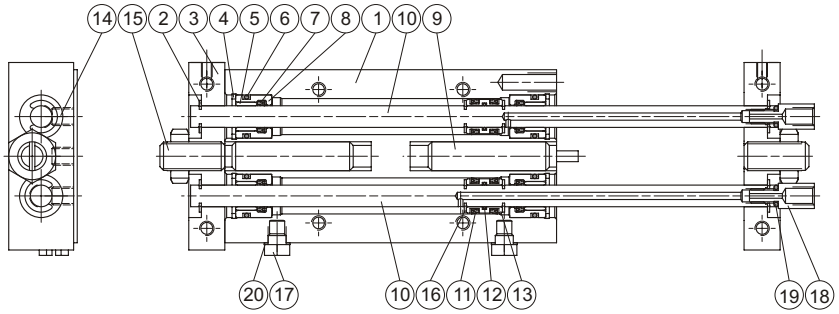

ϕ16, ϕ25

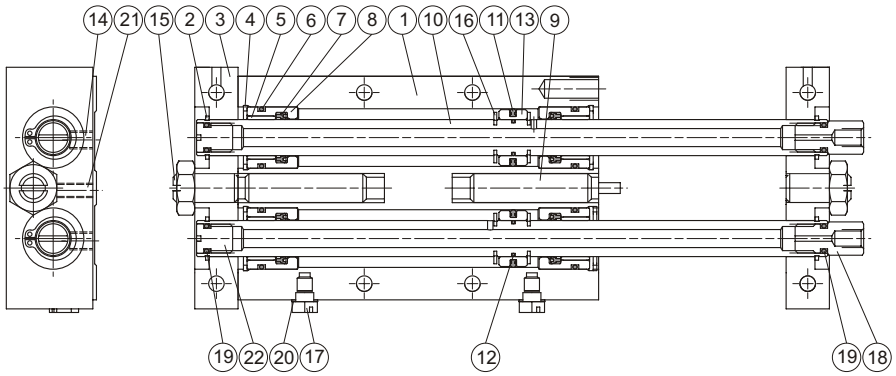

Material

No.	Part name	Material
1	Body	Aluminum alloy
2	Snap ring #1	Spring steel
3	Connector	Aluminum alloy
4	Snap ring #2	Spring steel
5	Rod bush	Copper
6	Cover gasket	NBR
7	Rod packing	NBR
8	Rod cover	Aluminum alloy
9	Absorber	—
10	Piston rod	Medium carbon steel
11	Piston packing	NBR
12	Piston gasket	NBR
13	Piston	Aluminum alloy
14	Set screw #1	Carbon steel
15	Set screw #2	Carbon steel
16	Snap ring #3	Spring steel
17	Plug #1	Copper
18	Fitting	Steel
19	O ring for fitting	NBR
20	Plug gasket	Plastic
21	Set screw #3	Carbon steel
22	Plug #2	Copper

MCDB Inside structure & Parts list ϕ20, ϕ32

DUAL-ROD SLIDE CYLINDER

ϕ20, ϕ32

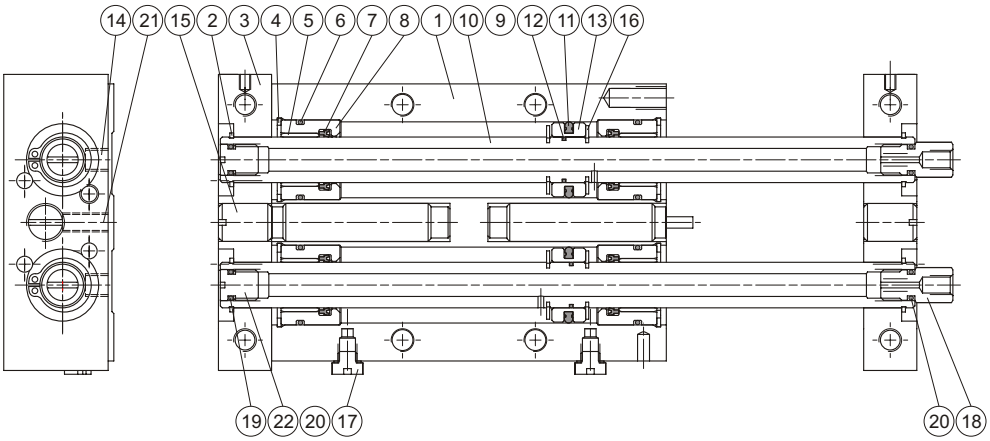

Material

No.	Part name	Material
1	Body	Aluminum alloy
2	Snap ring #1	Spring steel
3	Connector	Aluminum alloy
4	Snap ring #2	Spring steel
5	Rod bush	Copper
6	Cover gasket	NBR
7	Rod packing	NBR
8	Rod cover	Aluminum alloy
9	Absorber	—
10	Piston rod	Medium carbon steel
11	Piston packing	NBR
12	Piston gasket	NBR
13	Piston	Aluminum alloy
14	Set screw #1	Carbon steel
15	Set screw #2	Carbon steel
16	Snap ring #3	Spring steel
17	Plug #1	Copper
18	Fitting	Steel
19	O ring for fitting	NBR
20	Plug gasket	Plastic
21	Set screw #3	Carbon steel
22	Plug #2	Copper

MCDB-03 Dimensions ϕ10, ϕ16, ϕ25 stroke: 25

DUAL-ROD SLIDE CYLINDER

mindman

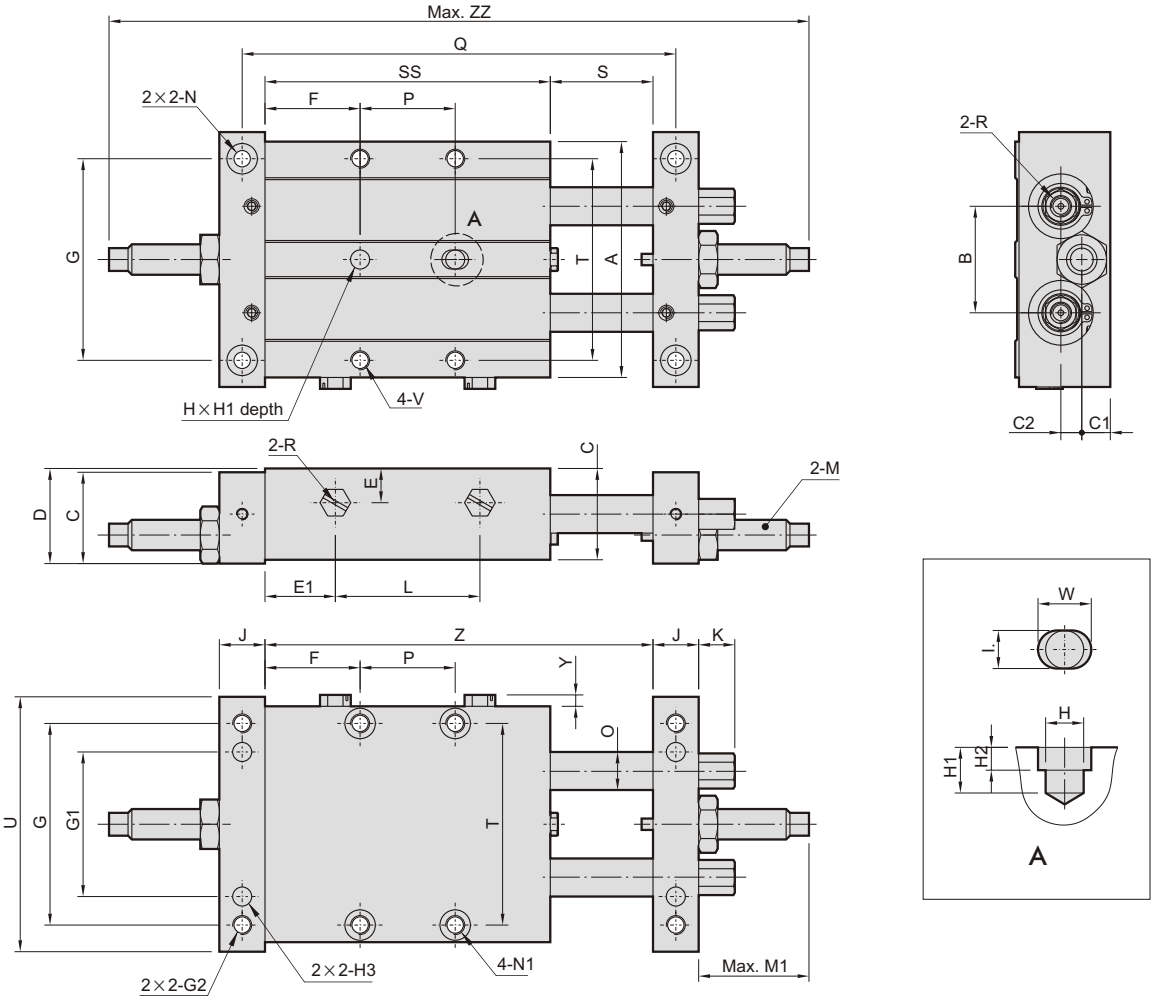

(mm)

Tube I.D. \ Code / Stroke	A	B	C	C1	C2	D	E	E1	F	G	G1	G2	H(H7)	H1	H2	H3(H7)	I	J	K	L	M
10 25	48	22	18	6.5	2.5	19	6.5	14.5	21	40	28	M4×0.7×8dp	ϕ4	6	3	ϕ4×5dp	ϕ4	10	9.5	38	M8×1.0(MAC-0806-SN)
16 25	62	28	24	7.5	5.5	25	9	18.5	25	53	38	M5×0.8×10dp	ϕ5	6	3	ϕ5×6dp	ϕ5	12	9.5	38	M8×1.0(MAC-0806-SN)
25 25	79	35	32	9	9	34	16	19.5	28.5	67	50	M6×1.0×12dp	ϕ6	8	4	ϕ6×8dp	ϕ6	16	-	43	M10×1.0(MAC-1007-SN)

Tube I.D. \ Code / Stroke	M1	N	N1	O	P	Q	R	S	SS	T	U	V	W	Y	Z	ZZ
10 25	32.6	ϕ3.3thru 6.5×3.2dp	ϕ3.2thru 6.5×3.3dp	ϕ6	25	104	M5×0.8	27	67	37	52	M4×0.7×6dp	6	3	94	179.2
16 25	30.6	ϕ4.3thru 8×4.5dp	ϕ4.3thru 8×4.5dp	ϕ10	25	114	M5×0.8	27	75	53	67	M5×0.8×10dp	7	3	102	187.2
25 25	33	ϕ5.2thru 9.5×5dp	ϕ5.5thru 9.5×5.5dp	ϕ12	25	125	PT 1/8	27	82	67	84	M6×1.0×12dp	8	-	109	207

MCDB-03 ϕ10 stroke: 50~75 / ϕ16, ϕ25 stroke: 50~200

DUAL-ROD SLIDE CYLINDER

mindman

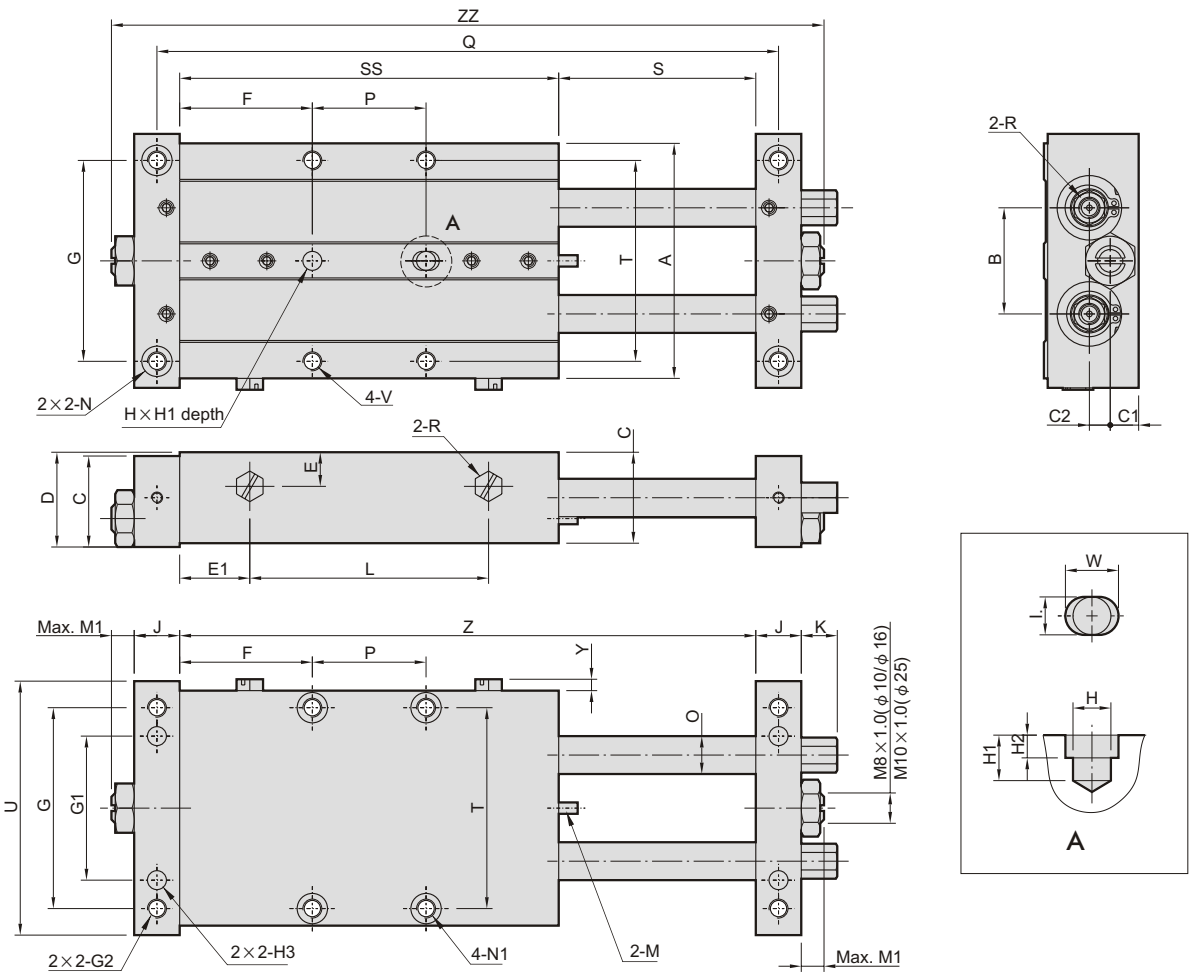

MCDB-03

(mm)

Tube I.D. \ Code / Stroke	A	B	C	C1	C2	D	E	E1	G	G1	G2	H(H7)	H1	H2	H3(H7)	I	J	K	M	M1
10	50~75	48	22	18	6.5	2.5	19	6.5	14.5	40	28	M4×0.7×8dp	φ4	6	3	φ4×5dp	φ4	10	9.5	M8×1.0(MAC-0806-2)	8
16	50~200	62	28	24	7.5	5.5	25	9	18.5	53	38	M5×0.8×10dp	φ5	6	3	φ5×6dp	φ5	12	9.5	M8×1.0(MAC-0806-2)	6
25	50~200	79	35	32	9	9	34	16	20.5	67	50	M6×1.0×12dp	φ6	8	4	φ6×8dp	φ6	16	-	M10×1.0(MAC-1008-2)	6

Tube I.D. \ Code / Stroke	N	N1	O	R	T	U	V	W	Y
10	50~75	φ3.3thru 6.5×3.2dp	φ3.2thru 6.5×3.3dp	φ6	M5×0.8	37	52	M4×0.7×6dp	6	3
16	50~200	φ4.3thru 8×4.5dp	φ4.3thru 8×4.5dp	φ10	M5×0.8	53	67	M5×0.8×10dp	7	3
25	50~200	φ5.2thru 9.5×5dp	φ5.5thru 9.5×5.5dp	φ12	PT 1/8	67	84	M6×1.0×12dp	8	-

MCDB-03 : ϕ10

Code / Stroke	F	L	P	Q	S	SS	Z	ZZ
50	26	63	40	154	52	92	144	172
75	26	88	65	204	77	117	194	222

MCDB-03 : ϕ16

Code / Stroke	F	L	P	Q	S	SS	Z	ZZ
50	35	63	30	164	52	100	152	188
75	32.5	88	60	214	77	125	202	238
100	37.5	113	75	264	102	150	252	288
125	42.5	138	90	314	127	175	302	338
150	55	163	90	364	152	200	352	388
175	67.5	188	90	414	177	225	402	438
200	80	213	90	464	202	250	452	488

MCDB-03 : ϕ25

Code / Stroke	F	L	P	Q	S	SS	Z	ZZ
50	31	66	45	175	52	107	159	203
75	33.5	91	65	225	77	132	209	253
100	33.5	116	90	275	102	157	259	303
125	46	141	90	325	127	182	309	353
150	58.5	166	90	375	152	207	359	403
175	71	191	90	425	177	232	409	453
200	83.5	216	90	475	202	257	459	503

MCDB-03 ϕ20 stroke: 25 / ϕ32 stroke: 25~50

DUAL-ROD SLIDE CYLINDER

mindman

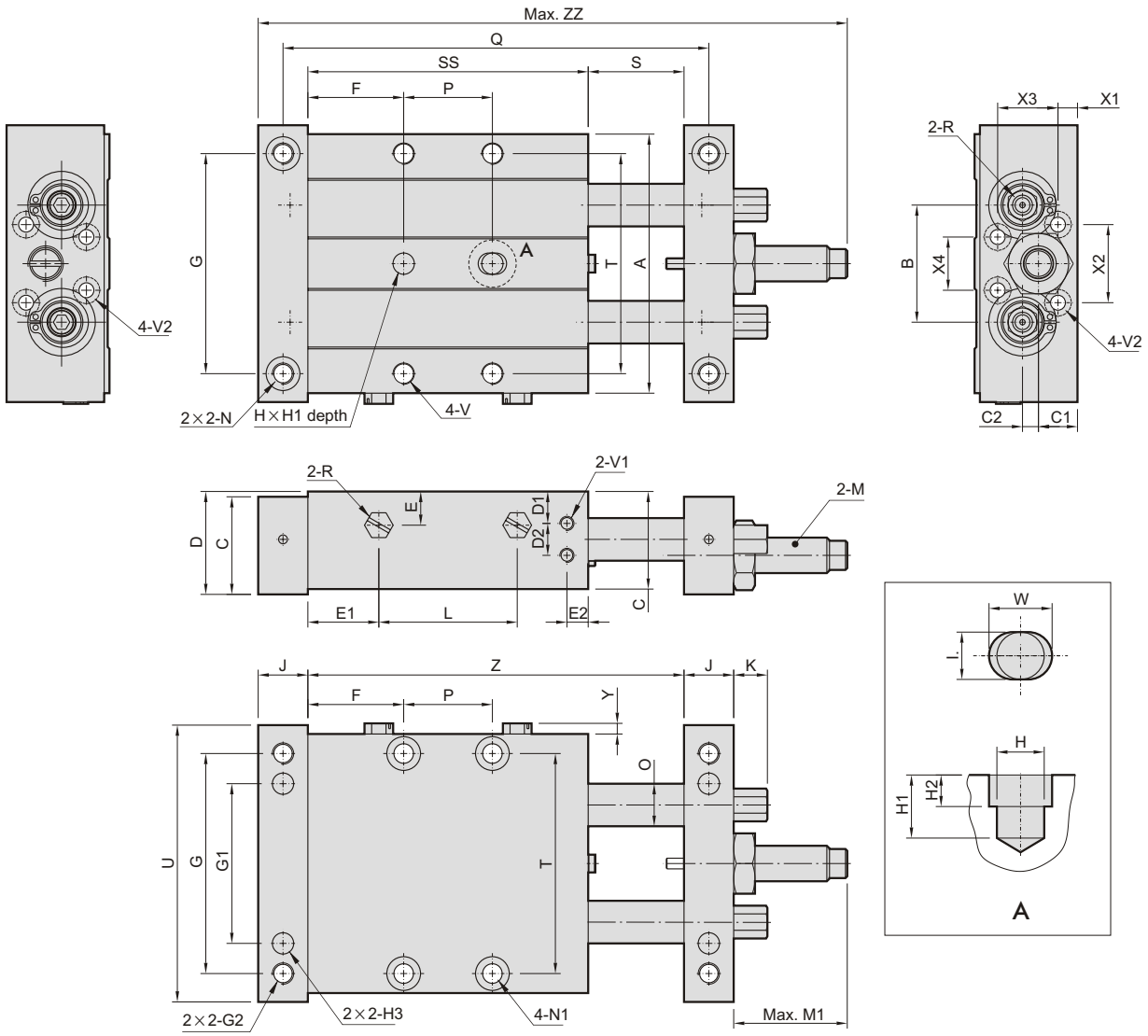

MCDB-03

(mm)

Tube I.D. \ Code / Stroke		A	B	C	C1	C2	D	D1	D2	E	E1	E2	F	G	G1	G2	H(H7)	H1	H2	H3(H7)	I	J	K	L
20	25	73	33	27.5	11	4.5	29	9	9	9.5	20	6	27	62	45	M6×1.0×12dp	ϕ6	8	4	ϕ6×8dp	ϕ6	14	9.5	39
32	25	113	55	38.5	13.5	7	40	10.5	12	15	27.5	10	37	105	84	M8×1.25×15dp	ϕ8	12	6	ϕ8×12dp	ϕ8	20	14.5	41
	50										28		38											65

Tube I.D. \ Code / Stroke		M	M1	N	N1	O	P	Q	R	S	SS	T	U	V
20	25	M10×1.0(MAC-1008-2)	32	ϕ5.2thru 9.5×5dp	ϕ5.5thru 9.5×5.5dp	ϕ12	25	120	M5×0.8	27	79	62	78	M6×1.0×9dp
32	25	M14×1.5(MAC-1412-SN)	50	ϕ6.9thru 11×6.5dp	ϕ6.9thru 11×7dp	ϕ20	22	143	PT 1/8	27	96	100	118	M8×1.25×15dp
	50						45	193		52	121			

Tube I.D. \ Code / Stroke		V1	V2	W	X1	X2	X3	X4	Y	Z	ZZ
20	25	M4×0.7×5dp	M5×0.8thru 7.5×4.5dp(back side)	8	5.5	22	17	15	3	106	166
32	25	M6×1.0×7dp	M5×0.8thru 7.5×4.5dp(back side)	10	7.5	31	24.5	31	-	123	213
	50									173	263

MCDB-03 ϕ20 stroke: 50~200 / ϕ32 stroke: 75~200

DUAL-ROD SLIDE CYLINDER

mindman

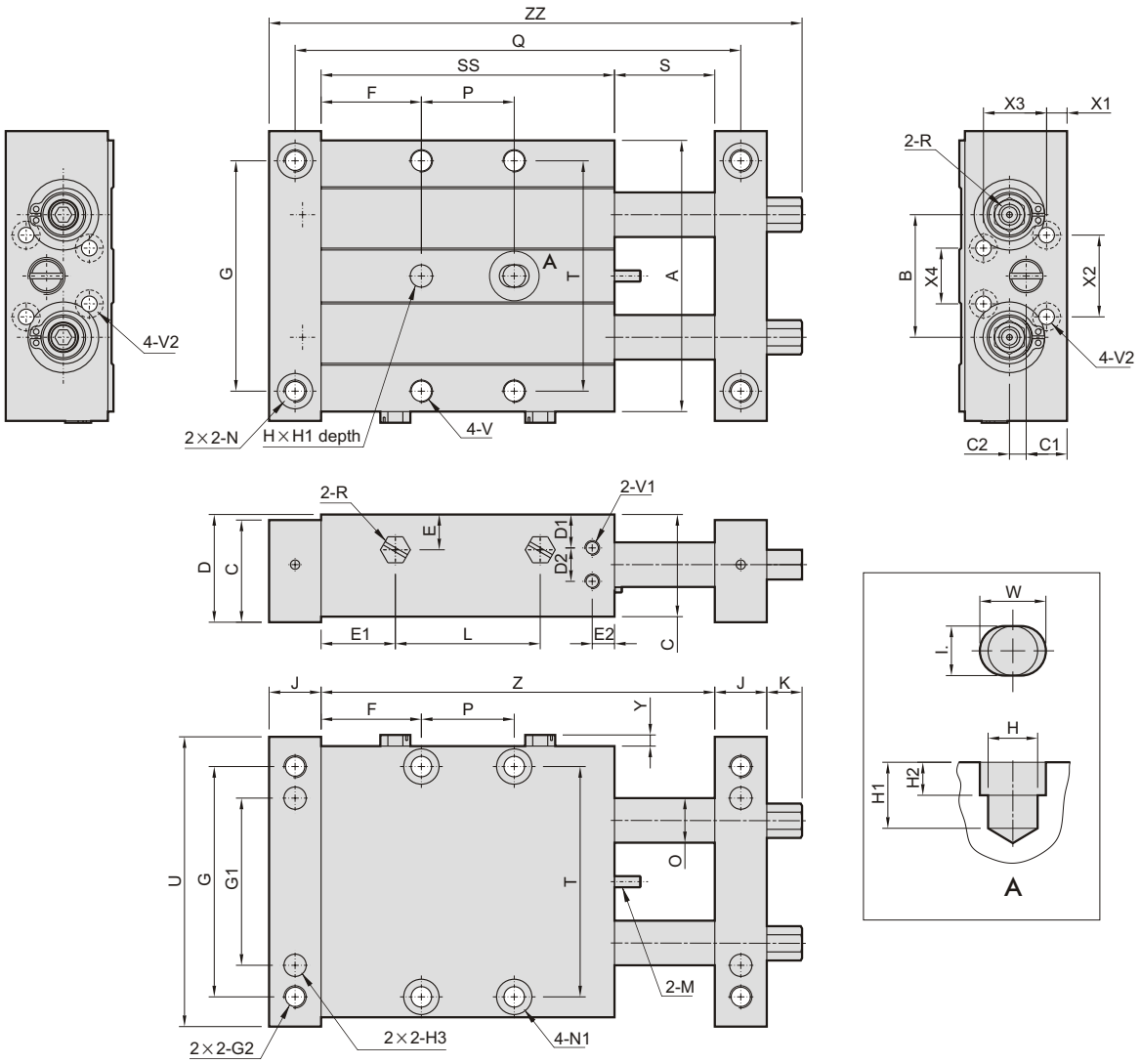

MCDB-03

(mm)

Tube I.D. \ Code / Stroke	A	B	C	C1	C2	D	D1	D2	E	E1	E2	G	G1	G2	H(H7)	H1	H2	H3(H7)	I	J	K	M
20	50~200	73	33	27.5	11	4.5	29	9	9	9.5	20	6	62	45	M6×1.0×12dp	ϕ6	8	4	ϕ6×8dp	ϕ6	14	9.5	M10×1.0(MAC-1008-2)
32	75~200	113	55	38.5	13.5	7	40	10.5	12	15	28	10	105	84	M8×1.25×15dp	ϕ8	12	6	ϕ8×12dp	ϕ8	20	14.5	M14×1.5(MAC-1412-SN)

Tube I.D. \ Code / Stroke	N	N1	O	R	R1	T	U	V	V1	V2	W	X1	X2	X3	X4	Y
20	50~200	ϕ5.2thru 9.5×5dp	ϕ5.5thru 9.5×5.5dp	ϕ12	M5×0.8	M4×0.7×5dp	62	78	M6×1.0×9dp	M4×0.7×5dp	M5×0.8thru 7.5×4.5dp(back side)	8	5.5	22	17	15	3
32	75~200	ϕ6.9thru 11×6.5dp	ϕ6.9thru 11×7dp	ϕ20	PT 1/8	M6×1.0×7dp	100	118	M8×1.25×15dp	M6×1.0×7dp	M5×0.8thru 7.5×4.5dp(back side)	10	7.5	31	24.5	31	-

MCDB-03 : ϕ20

Code / Stroke	F	L	P	Q	S	SS	Z	ZZ
50	34.5	64	35	170	52	104	156	193.5
75	34.5	89	60	220	77	129	206	243.5
100	39.5	114	75	270	102	154	256	293.5
125	44.5	139	90	320	127	179	306	343.5
150	57	164	90	370	152	204	356	393.5
175	69.5	189	90	420	177	229	406	443.5
200	82	214	90	470	202	254	456	493.5

MCDB-03 : ϕ32

Code / Stroke	F	L	P	Q	S	SS	Z	ZZ
75	38	90	70	243	77	146	223	277.5
100	38	115	95	293	102	171	273	327.5
125	38	140	120	343	127	196	323	377.5
150	38	165	145	393	152	221	373	427.5
175	38	190	170	443	177	246	423	477.5
200	38	215	195	493	202	271	473	527.5